Ø 225 MM, FORWARD CURVED

AC CENTRIFUGAL FAN

Features

- **Impeller material:** galvanized steel
- **Direction of rotation:** clockwise, seen on rotor
- **Type of protection:** IP54
- **Insulation class:** F
- **Mode of operation:** continuous operation (S1)
- **Bearing:** ball bearings
- **Motor protection:** self-resetting TOP wired internally

Technical data

Model	Perform. curve	Nominal voltage [VAC]	Frequency [Hz]	Speed [RPM]	Power input max [W]	Current max [A]	Sound pres. level [dB(A)]	Perm. amb. temp. [°C]	Capacitor [µF/VDB]	Electrical connection
BL-F225A-4E-O01-01	I	230	50	1320	510	2.30	71	−25 ... +50	8.0/450	A
BL-F225A-6E-O01-01	II	230	50	930	250	1.30	68	−25 ... +70	6.0/450	A
BL-F225A-4D-O01-01	III	230	50	1300	490	1.43	71	−25 ... +60	–	B1
		400	50	1300	490	0.82	71	−25 ... +60	–	B2
BL-F225A-6D-L01-01	IV	230	50	930	300	1.40	68	−25 ... +70	–	B1
		400	50	930	300	0.81	68	−25 ... +70	–	B2

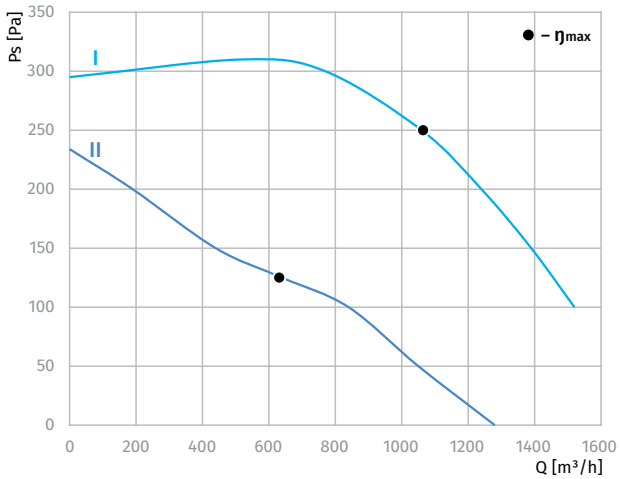

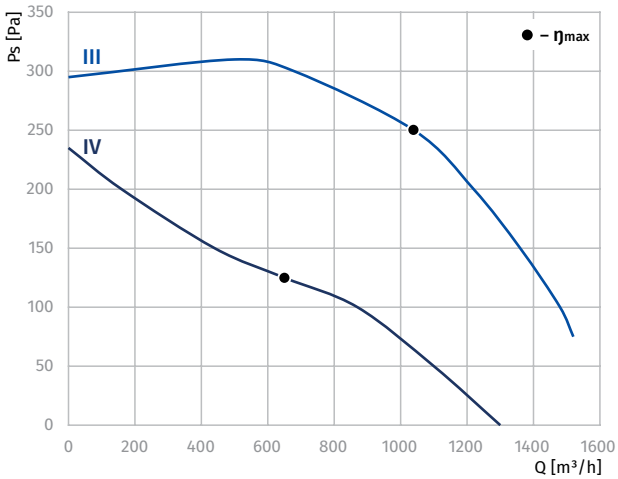
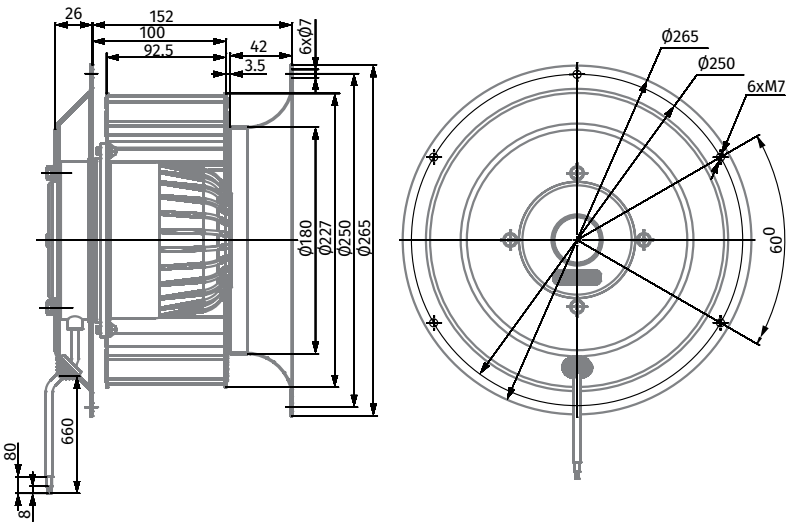
Overal Dimmensions